NEW

DRS61: Incremental encoders, number of lines and zero pulse width freely programmable

DRS60: Incremental Encoders with Zero-Pulse-Teach

DATA SHEET

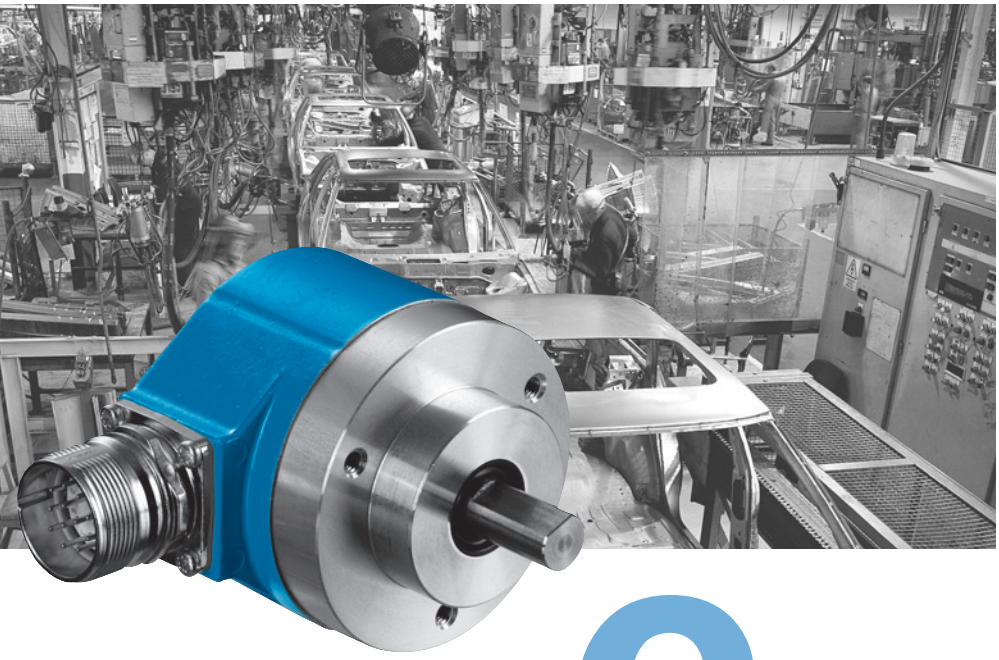

Number of lines 1 up to 8,192

Incremental Encoder

CoreTech® by SICK | STEGMANN

CoreTech technology permits tailor-made solutions for every application, due to its modular design.

With DRS61 incremental encoders, the number of lines from 1 to 8,192 and the width of the zero pulse can be freely programmed **by the customer**. Therefore, they will be of particular interest to end users, distributors, consulting engineers and system integrators.

DRS60 incremental encoders are available with any desired number of lines between 1 and 8,192.

Further highlights of this generation of encoders:

- Simple zero-pulse-teach by pressing a button located under a cap on the rear of the encoder
- Excellent price/performance ratio
- Long LED lifetime as a result of automatic light regulation
- Maximum reliability as a result of opto-ASICs with Chip-on-Board technology
- Interchangeable collets for hollow shaft diameters from 6 to 15 mm and 1/4, 3/8, 1/2 inch.

Whether with face mount flange, servo flange, blind or through hollow shaft with connector or cable outlet, TTL or HTL interface – DRS60/61 encoders will meet virtually any application profile.

Thanks to this wide variety of products, there are numerous possible uses, for example in:

- machine tools
- textile machines
- woodworking machines
- packaging machines

Seltec Automation LLP
Unit G, Venture Business Park
Witty Street,
Hull.
East Yorkshire.
Tel. 01482 225297
Fax. 01482 212470
Web. www.seltec.co.uk

SICK | STEGMANN

09-2006

Number of lines
1 up to 8,192

Incremental Encoder

- Connector or cable outlet
- Protection class up to IP 66
- Electrical interfaces TTL and HTL
- Zero-Pulse-Teach via pressing a button
- DRS61: number of lines and zero pulse width can be freely programmed **by the customer**

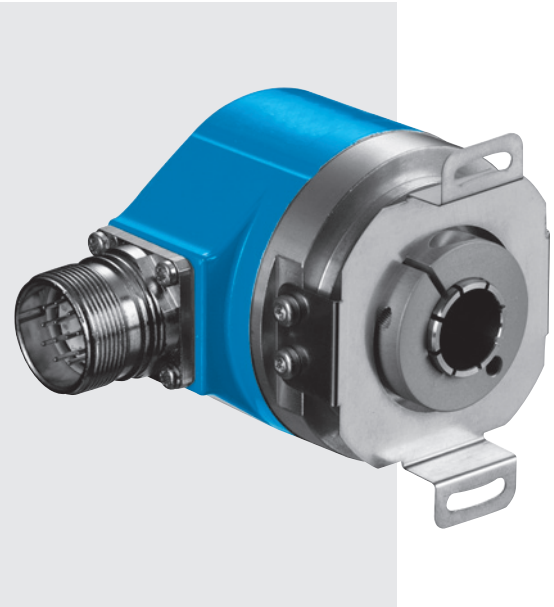

Dimensional drawing through hollow shaft radial

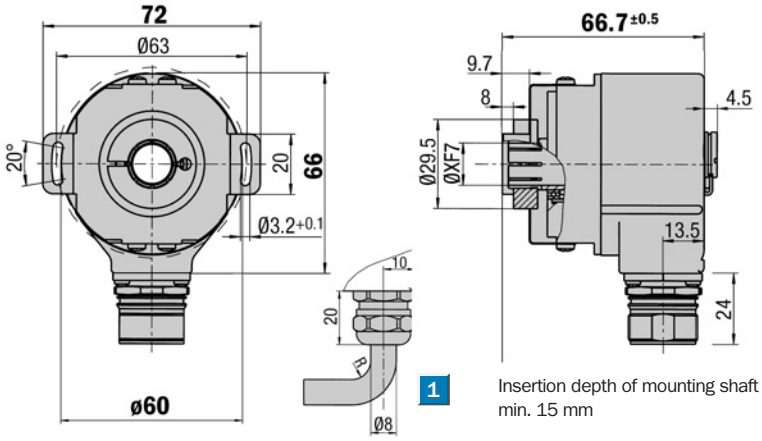

1 R = bending radius min. 40 mm

General tolerances according to DIN ISO 2768-mk

PIN and wire allocation/cable 11 core

PIN	Signal	Wire colour (Cable outlet)	Explanation
1	$\overline{B}$	black	Signal line
2	Sense +	grey	Connected internally to U_s
3	Z	lilac	Signal line
4	$\overline{Z}$	yellow	Signal line
5	A	white	Signal line
6	$\overline{A}$	brown	Signal line
7	N. C.	orange	Not connected
8	B	pink	Signal line
9	Screen		Housing potential
10	GND	blue	Zero volt connected to the encoder
11	Sense –	green	Connected internally to GND
12	U_s	red	Supply voltage [1]

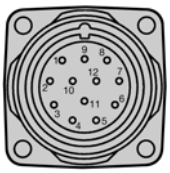

View of the connector M23 fitted to the encoder body

[1] Potential free to housing

N. C. = Not connected

Accessories

- Connection systems
- Mounting systems
- Collets
- Programming Tool

Technical Data acc. to DIN 32878	DRS60/DRS61 through hollow shaft	Flange type									
		through									
Hollow shaft diameter	6, 8, 10, 12 mm and 1/4", 3/8", 1/2"										
Number of lines per revolution	00001 up to 08192, see order info										
Electrical Interface	TTL/RS 422, 6-channel										
	HTL/push-pull, 6-channel										
Mass [1]	Approx. 0.3 kg										
Moment of inertia of the rotor	See Fig. 1										
Measuring step	90°/number of lines										
Reference signal											
Number	1										
Position [2]	90° or 180°										
Error limits											
binary number of lines	0.035°										
non-binary number of lines	0.046°										
Measuring step deviation											
binary number of lines	0.005°										
non-binary number of lines	0.016°										
Max. output frequency											
TTL	820 kHz										
HTL	200 kHz										
Operating torque max.	3,000 min^{-1}										
Max. angular acceleration	5×10^5 rad/s^2										
Operating torque	Typ. 1.6 Ncm										
Start up torque	Typ. 2.2 Ncm										
Permissible movement of the drive element											
radial static/dynamic movement	± 0.3/± 0.1 mm										
axial static/dynamic movement	± 0.5/± 0.2 mm										
Bearing lifetime	3.6×10^9 revolutions										
Working temperature range	– 20 … + 85 °C										
Storage temperature range	– 40 … + 100 °C										
Permissible relative humidity [3]	90 %										
EMC [4]											
Resistance											
to shocks [5]	50 /11 g/ms										
to vibration [6]	20/10 … 2000 g/Hz										
Protection class IEC 60529											
Connector outlet [7]	IP 64										
Cable outlet	IP 64										
Operating voltage range											
Load current TTL/RS 422, 4.5 … 5.5 V	Max. 20 mA										
TTL/RS 422, 10 … 32 V	Max. 20 mA										
HTL/push-pull, 10 … 32 V	Max. 60 mA										
No-load operating current											
at 10 … 32 V	Typ. 100 mA										
at 5 V	Typ. 120 mA										
Operation of zero-set [8]	≥ 100 ms										
Initialisation time after power on	40 ms										

[1] Concerning encoder with connector
[2] Electrical, logically linked to A and B
[3] Condensation of the optical scanning not permitted
[4] To DIN EN 61000-6-2 and DIN EN 61000-6-2
[5] To DIN EN 60068-2-27
[6] To DIN EN 60068-2-6
[7] With mating connector fitted
[8] Only with shaft stationary

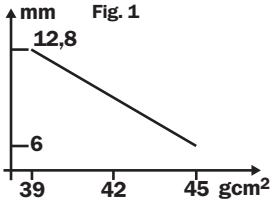

Fig. 1

Order information see page 17

Number of lines
1 up to 8,192

Incremental Encoder

- Connector or cable outlet
- Protection class up to IP 66
- Electrical interfaces TTL and HTL
- Zero-Pulse-Teach via pressing a button
- DRS61: number of lines and zero pulse width can be freely programmed **by the customer**

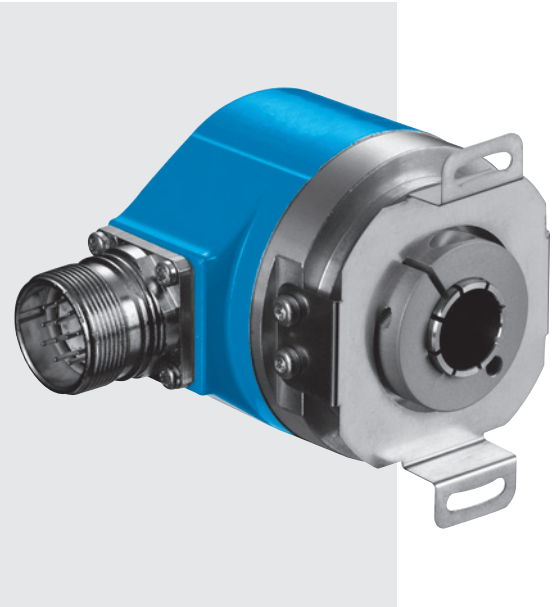

Incremental pulse diagram

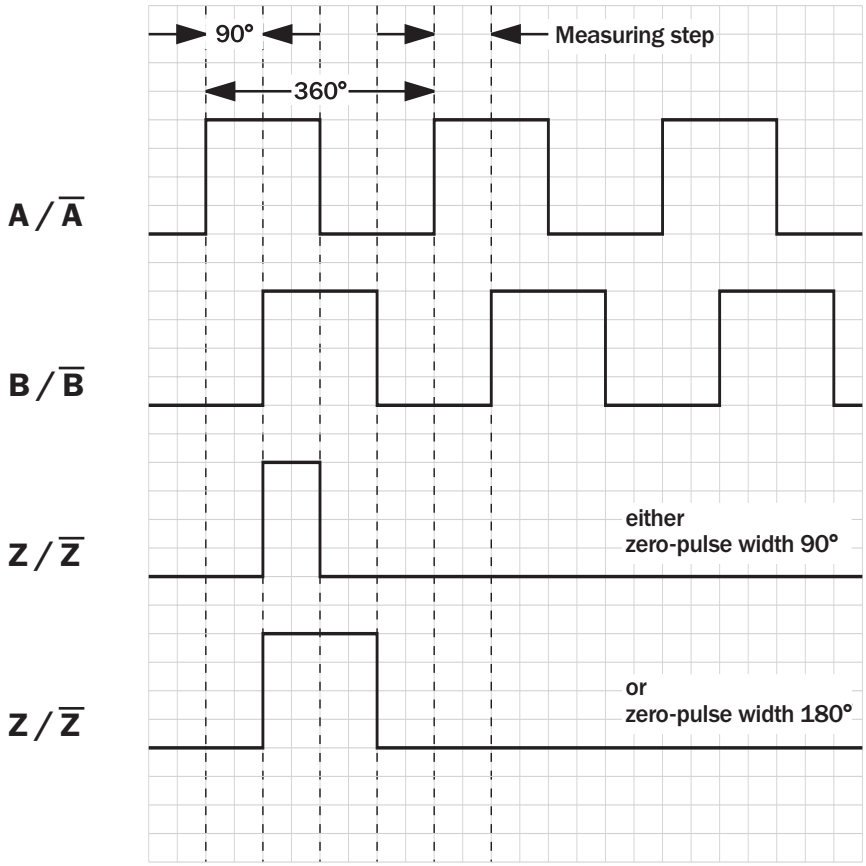

Electrical interface			
Supply voltage	4.5 … 5.5 V	10 … 32 V	10 … 32 V
Interfaces/drivers	TTL (RS 422)	TTL (RS 422)	HTL (push-pull)

Connection type	
Cable radial	Connector radial

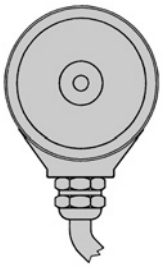

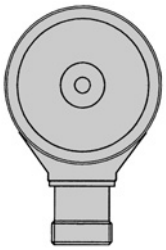

Accessories
Connection systems
Mounting systems
Collets
Programming Tool

Order information

Incremental Encoder DRS60, through hollow shaft

Point 1	Point 2	Point 3	Point 4	Point 5	Point 6	Point 7	Point 8	Point 9	Point 10	Point 11	Point 12	Point 13	Point 14
D	R	S	6	0	–		D						

Electrical interface

4.5 … 5.5 V, TTL/RS 422 Zero-pulse width 90°	= A
4.5 … 5.5 V, TTL/RS 422 Zero-pulse width 180°	= B
10 … 32 V, TTL/RS 422 Zero-pulse width 90°	= C
10 … 32 V, TTL/RS 422 Zero-pulse width 180°	= D
10 … 32 V, HTL/push-pull Zero-pulse width 90°	= E
10 … 32 V, HTL/push-pull Zero-pulse width 180°	= F

Mechanical interface

Through hollow shaft[1]	= D

[1] Collets for 6, 8, 10, 12 mm and 1/4", 3/8" and 1/2" as accessories, separate order item (see below).

Connection type

Connector M23, 12 pin, radial	= A
Cable 11 core, radial 1.5 m	= K
Cable 11 core, radial 3 m	= L
Cable 11 core, radial 5 m	= M
Cable 11 core, radial 10 m	= N

Number of lines

Each number of lines from 00001 up to 08192 possible.
Always 5 characters in clear text.

Order example Incremental Encoder DRS60

4.5 … 5.5 V, TTL/RS 422 zero-pulse width 90°; through hollow shaft; connector M23, 12 pin, radial; number of lines: 360

Point 1	Point 2	Point 3	Point 4	Point 5	Point 6	Point 7	Point 8	Point 9	Point 10	Point 11	Point 12	Point 13	Point 14
D	R	S	6	0	–	A	D	A	0	0	3	6	0

NEW

Incremental-Encoder DRS61 through hollow shaft (number of lines and zero pulse width can be freely programmed by the customer) [1]

Point 1	Point 2	Point 3	Point 4	Point 5	Point 6	Point 7	Point 8	Point 9	Point 10	Point 11	Point 12	Point 13	Point 14
D	R	S	6	1	–		D		0	8	1	9	2

Electrical interface

4.5 … 5.5 V, TTL/RS 422	= A
10 … 32 V, TTL/RS 422	= C
10 … 32 V, HTL/push-pull	= E

Mechanical interface

Through hollow shaft[1]	= D

[1] Collets for 6, 8, 10, 12 mm and 1/4", 3/8" and 1/2" as accessories, separate order item (see below).

Connection type

Connector M23, 12 pin, radial	= A
Cable 11 core, radial 1.5 m	= K

Number of lines

Factory-programmed to 8,192.

Order example Incremental Encoder DRS61

4.5 … 5.5 Volt, TTL/RS 422; through hollow shaft; connector M23, 12 pin, radial; number of lines: 8,192 (factory-programmed)

Point 1	Point 2	Point 3	Point 4	Point 5	Point 6	Point 7	Point 8	Point 9	Point 10	Point 11	Point 12	Point 13	Point 14
D	R	S	6	1	–	A	D	A	0	8	1	9	2

[1] Please order programming tool separately (see accessories page 18)

Through hollow shaft collets

Type	Part no.	Shaft diameter
SPZ-006-AD-D	2029192	6 mm
SPZ-1E4-AD-D	2029193	1/4"
SPZ-008-AD-D	2029194	8 mm
SPZ-3E8-AD-D	2029195	3/8"
SPZ-010-AD-D	2029196	10 mm
SPZ-012-AD-D	2029197	12 mm
SPZ-1E2-AD-D	2029198	1/2"